BARGE MASTER
MOTION COMPENSATION SOLUTIONS

Lifting作業時の安全フック

実証された技術に基づく

新規の洋上風車の運搬にも対応可能

Jones act遵守（米国版カボタージュ）

3D MOTION COMPENSATED FEEDER

Barge MasterのMotion Compensated BM-Feederは、最大搭載重量の調整が可能で、次世代洋上風車を含むすべての洋上風車のコンポーネントの運搬を可能とします。BM-Feederは、既存のBM-T700の技術の延長線上にあり、重量物のLifting作業、掘削、運搬に多くの実績を有します。

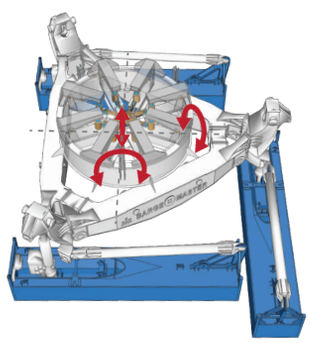

BM-T700のロール・ピッチ・ヒーブ動揺解消機能

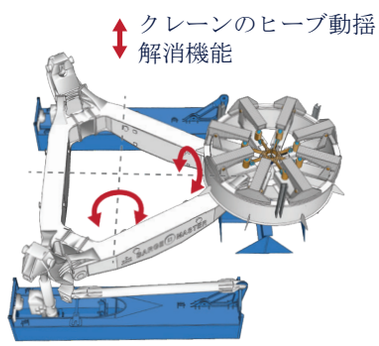

BM-Feederのロール・ピッチ動揺解消機能

SAFE HOOK ON & LIFT OFF

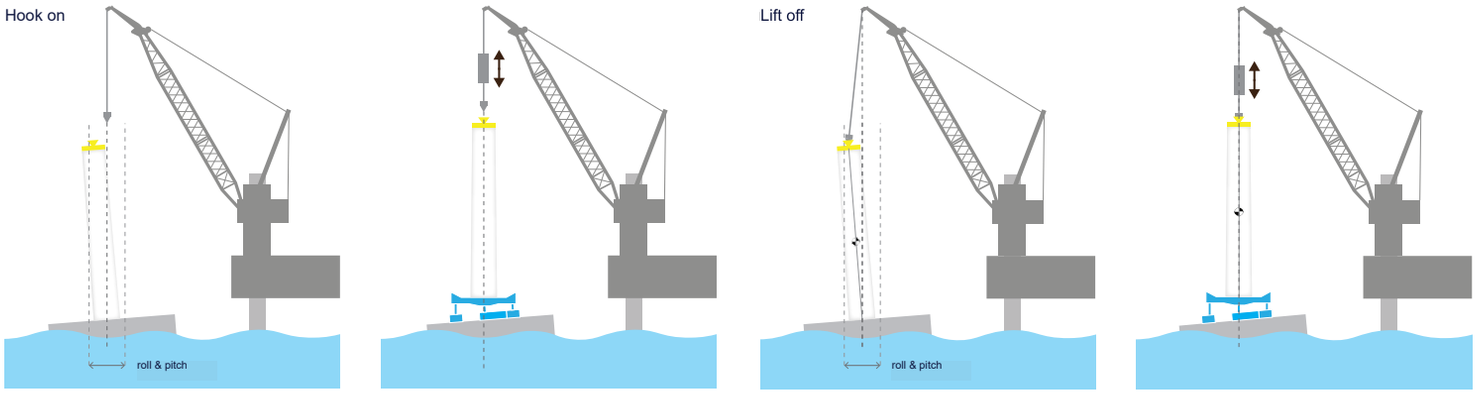

PROVEN TECHNOLOGY

BM-FEEDER, based on the BM-T700

Feeder operation using the BM-T700

FIT FOR PURPOSE

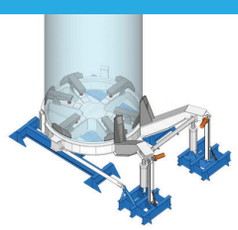

BM-FEEDER LIGHT

GE Haliade X	Siemens SG 11.0-200 DD
Tower 1	Tower 1+2
Tower 2	Tower 3+4
Tower 3	
Tower 1+2	
Tower 2+3	

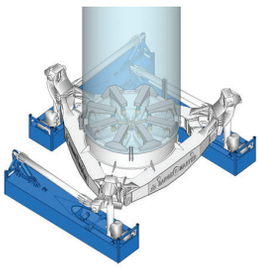

BM-FEEDER STANDARD

GE Haliade X	Siemens SG 11.0-200 DD
Tower 1	Tower 1+2
Tower 2	Tower 3+4
Tower 3	
Tower 1+2	
Tower 2+3	

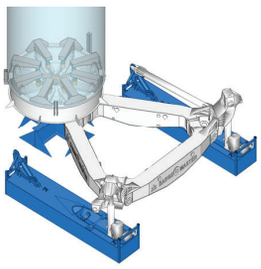

BM-FEEDER MEDIUM

GE Haliade X	Siemens SG 11.0-200 DD
Tower 1	Tower 1+2
Tower 2	Tower 3+4
Tower 3	
Tower 1+2	
Tower 2+3	

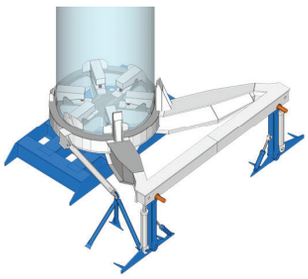

BM-FEEDER HEAVY

GE Haliade X	Siemens SG 11.0-200 DD
Tower 1	Tower 1+2
Tower 2	Tower 3+4
Tower 3	
Tower 1+2	
Tower 2+3	

GENERAL

Enables safe hook on
Enables safe lift off
Decreases re-impact risk
Increases workability

Payload capacity 700 - 1500 mT
BM-T700 is Lloyd's certified lifting appliance

COMPENSATION

Wave height	Hs 0 - >2.0 m
Wave period	4 - 18 s
Roll, pitch and heavo motions	95%

A quick retract function of the platform can be added

JONES ACT COMPLIANT

The BM-FEEDER can be mobilized on any U.S. flagged vessel or barge

Barge Master

T +31 (0)10 409 00 60
E info@barge-master.com
W www.barge-master.com

QUALITY SYSTEM CERTIFICATION DNV ISO 9001